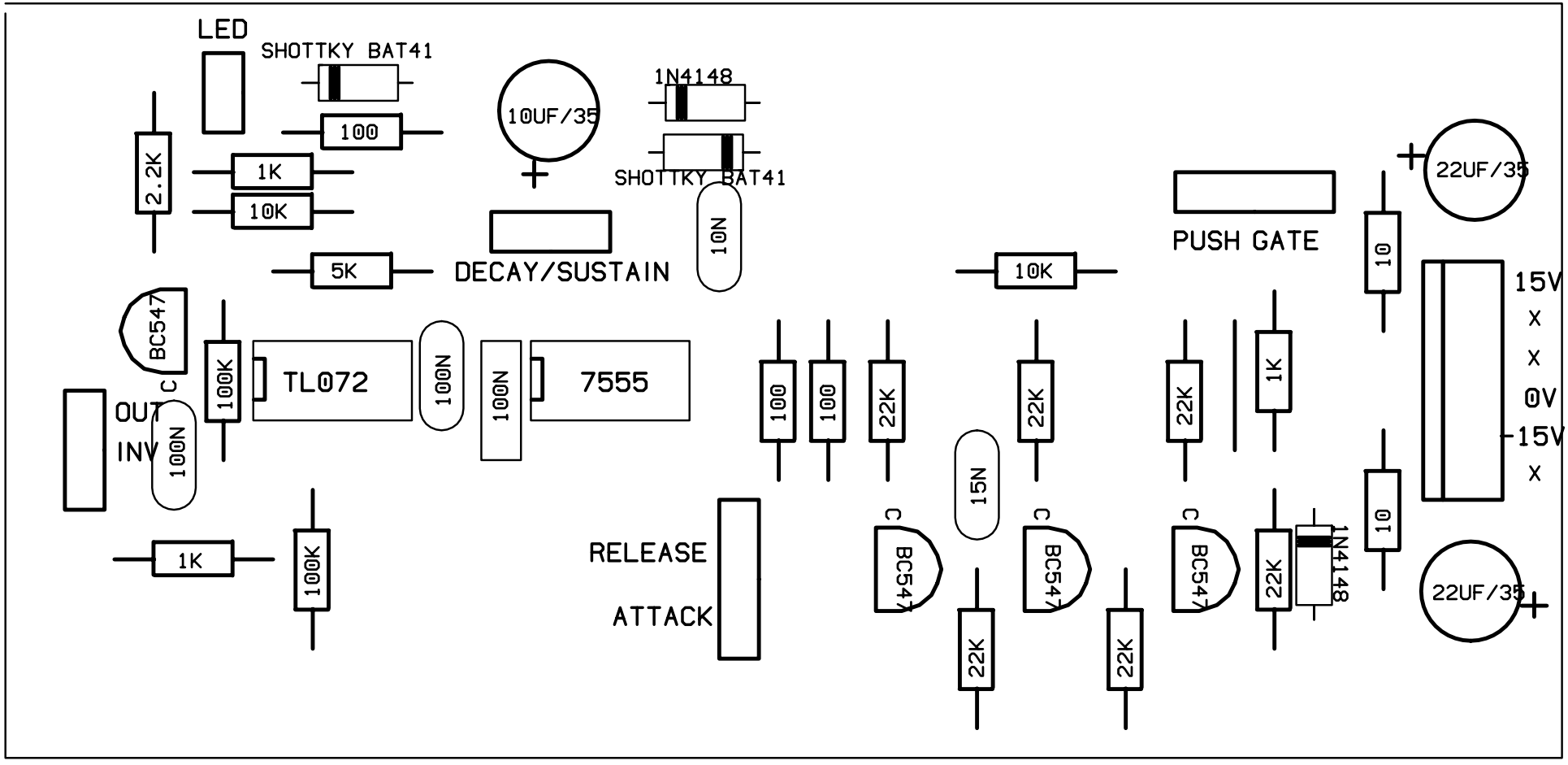
LED
SHOTTKY BAT41
100
10UF/35
1N4148
SHOTTKY BAT41
2.2K
1K
10K
5K
DECAY/SUSTAIN
10N
10K
PUSH GATE
22UF/35
10
15V
X
X
0V
-15V
X
BC547
C
100K
TL072
100N
100N
7555
100
100
22K
22K
22K
1K
OUT
INV
100N
15N
1K
100K
RELEASE
ATTACK
BC547
C
BC547
C
BC547
C
22K
22K
22K
1N4148
10
22UF/35